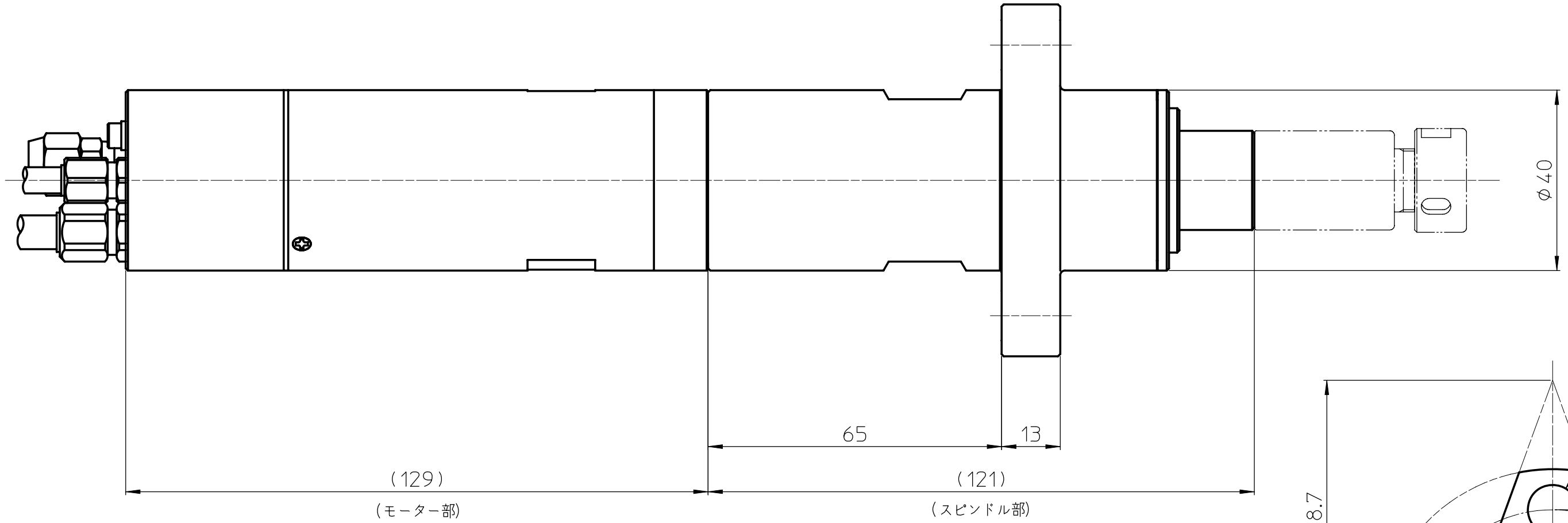


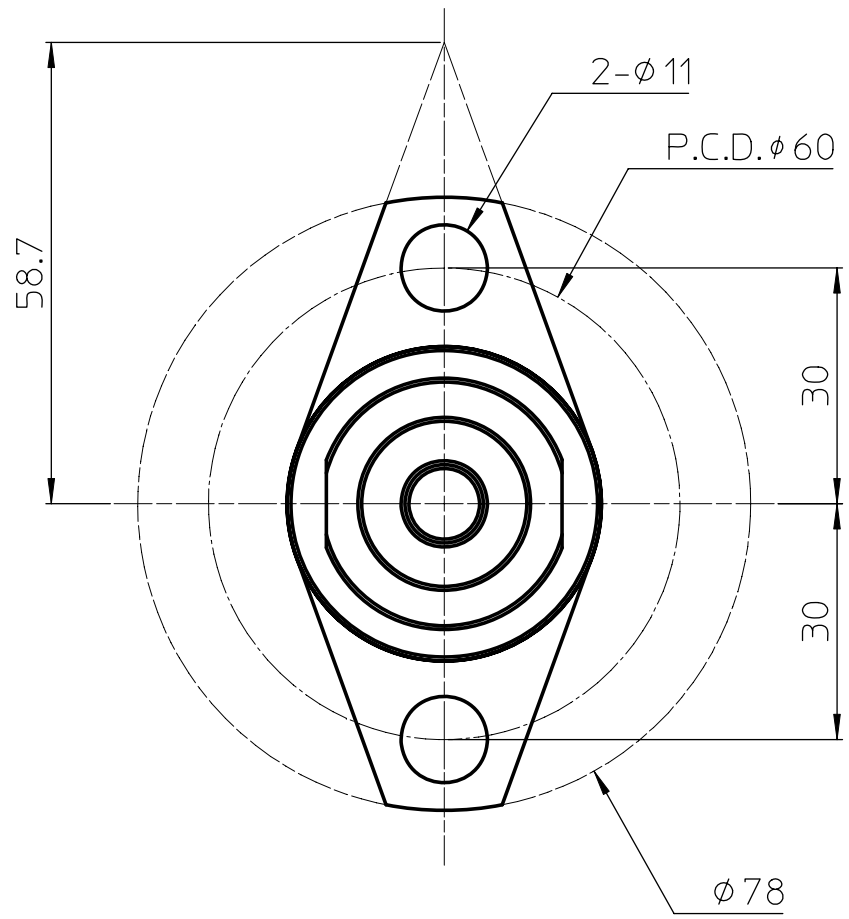


| DESCRIPTION | | | |
|---|---|---|---|
| 3 | | | |
| 2 | | | |
| 1 | | | |
| No. | ALTERATION | DATE | SIGN |

| DRAWN BY | INSPECTED BY | APPROVED BY |
|---|---|---|
| DATE '08.6.12 | DATE '08.6.12 | DATE '08.6.12 |
| HASHIMOTO | HASHIMOTO | HASHIMOTO |

| MATERIAL | HARDNESS | SCALE |
|---|---|---|
| | | 1:1 |

| TITLE | MODEL |
|---|---|
| DL40A外観図 | DL40 |

DRAWING No.

**LEXUS co.**